EFI-P4 AC 40/0.03

Specifications

ETI Code	002061612
Description	EFI-P4 AC 40/0.03
Class name	RCCB
Rated residual current (A)	0.03A
Residual current type	AC
Rated current (A)	40A
Depth (mm)	68mm
Mounting type	TH 35
Number of poles	3+N
Rated conditional short-circuit current Inc (kA)	10kA
Rated AC voltage (V)	400V/415V
Rated Frequency (Hz)	50Hz/60Hz
Rated cross section	1mm²-25mm²
Standards	IEC/EN 61008
IP rating	IP20

Online product page

Other documentation

Technical data catalogue
Certificate
3D Model
2D File
Instruction manual
CE declaration
White paper
Eplan file

ETIM international clasification

Classification	EC000003
Class name	Residual current circuit breaker (RCCB)
Number of poles	4
Rated voltage	415V
Rated current	40A
Rated fault current	30mA
Mounting method	DIN rail
Leakage current type	AC
Selective protection	No
Short-time delayed tripping	No
Short-circuit breaking capacity (Icw)	10kA
Surge current capacity	0,4kA
Frequency	50/60 Hz
Additional equipment possible	Yes
Degree of protection (IP)	IP20
Width in number of modular spacings	4
Built-in depth	68mm
Connectable conductor cross section multi-wired	1...25mm²

Dimension drawing

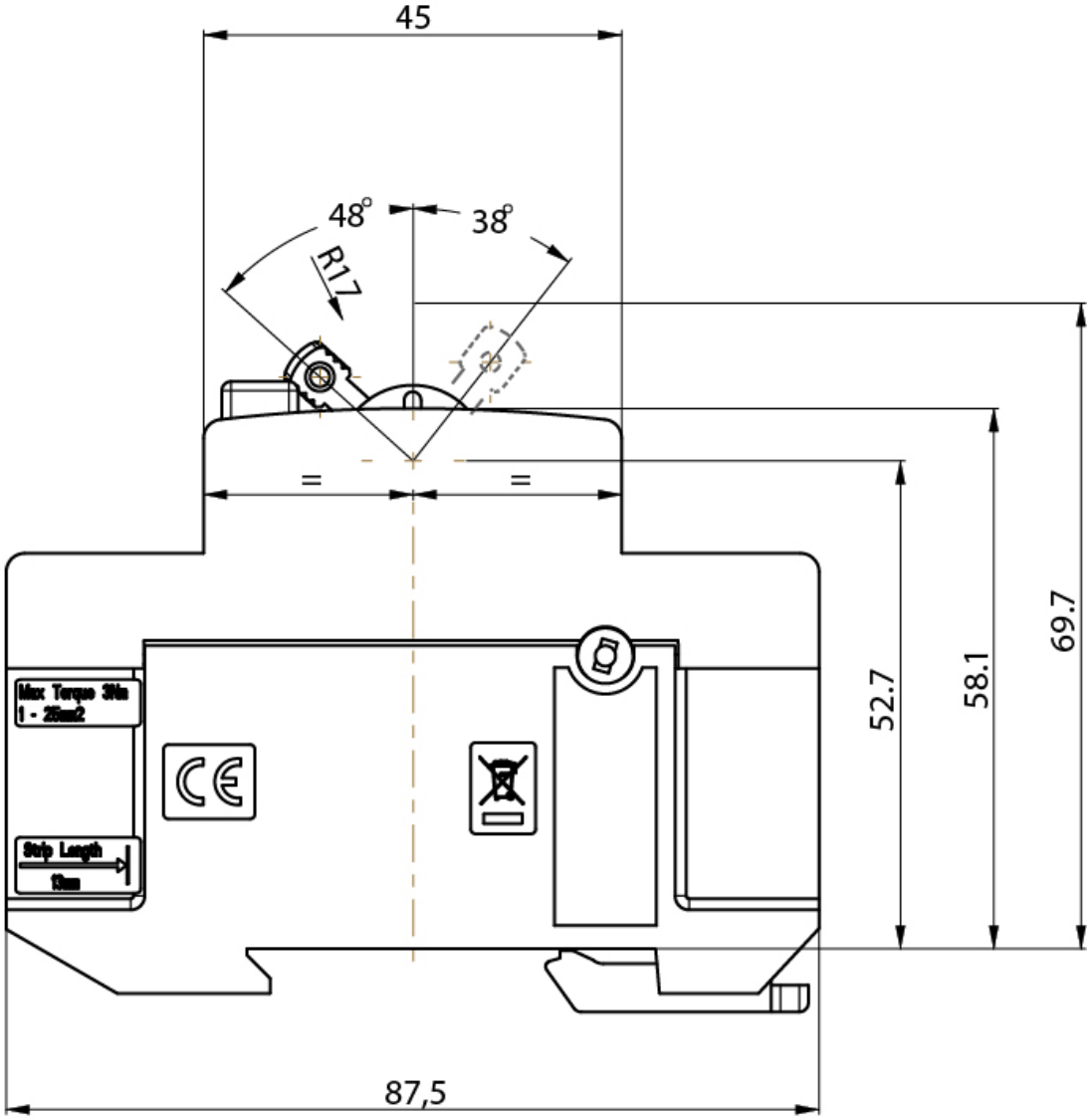
45
48°
38°
R17
=
=
52.7
58.1
69.7
87,5
Max Torque 3Nm
1 - 25mm2
Strip Length
10mm

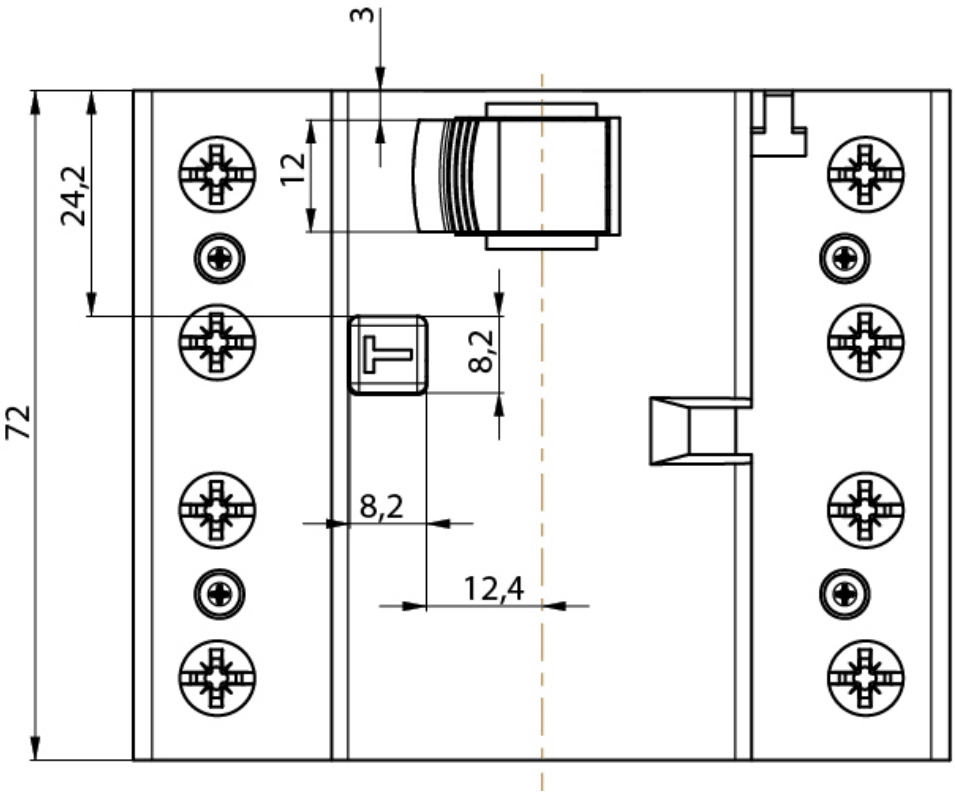
3
12
24,2
8,2
72
8,2
12,4
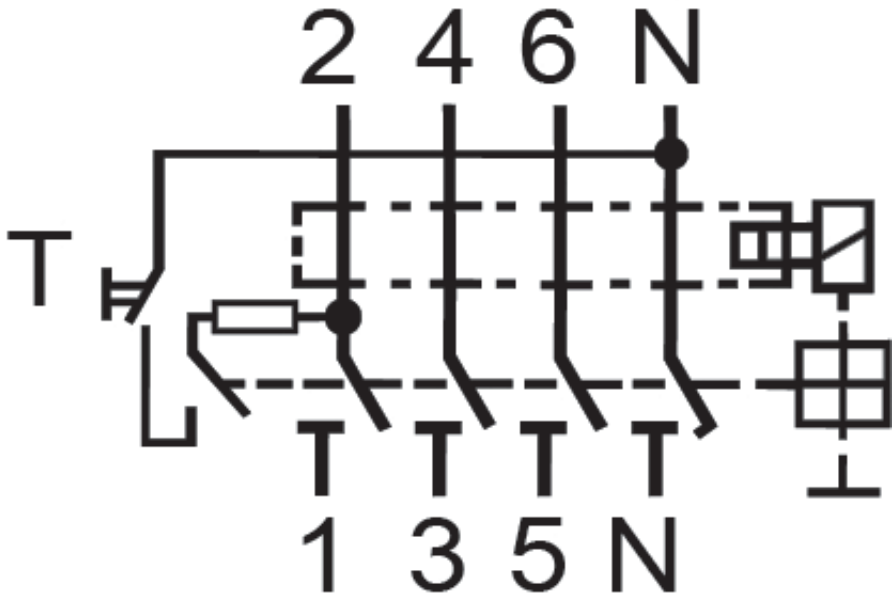
Wiring diagram